ALIMAK FM & FM-Ex

Cargo elevators

Access anytime, anywhere

ALIMAK

ALIMAK FM & FM-Ex

Main benefits

- Easy loading and unloading with crane or forklift since the platform floor will level with top most landing without permanent equipment above
- Wide range of sizes and capacities
- Slim installation profile
- Drive machinery located beneath the elevator floor means no costly and bulky machine room is required
- Fully collective elevator control system
- Explosion protected option
- DNV certified for offshore use
- Durable materials: car support frame and guide rails of hot dip galvanised steel. All stainless steel electrical cabinets and landing control boxes.
- Wide range of optional equipment and functions delivering you the right equipment for each individual task

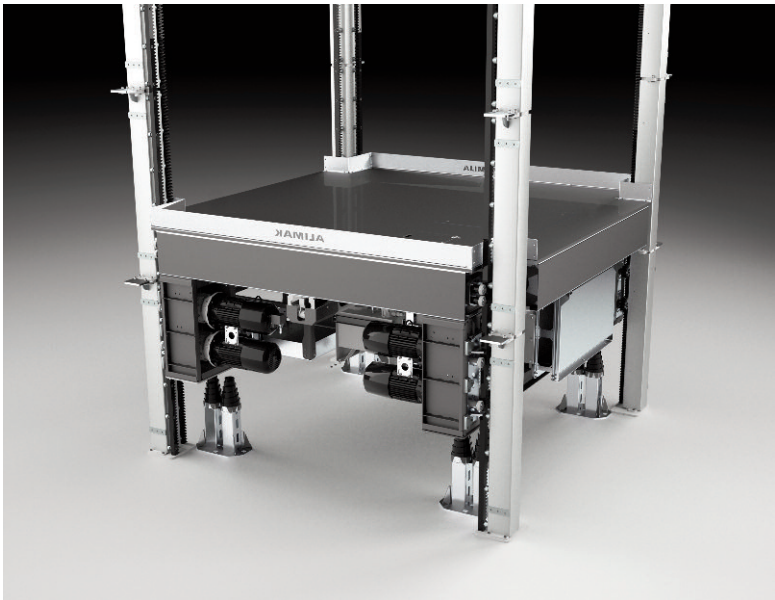

TECHNICAL SPECIFICATIONS

	ALIMAK FM	ALIMAK FM-Ex
Payload capacity	5,000–12,000 kg	5,000–12,000 kg
Static loading capacity	Up to 15,000 kg	Up to 15,000 kg
Travelling speed	0.25 m/s	0.25 m/s
Lifting height	Up to 15* m	Up to 15* m
Motor control	Frequency Control (FC)	Frequency Control (FC)
No. of motors	8	8
Elevator platform width (W)	3.35 m – 3.58* m	3.35 m – 3.58* m
Elevator platform length (L)	3.38 m – 4.54* m	3.38 m – 4.54* m
Access opening	W -0.84 m, L -0.60* m	W -0.84 m, L -0.60* m
Power supply range	380–690 V, 50/60 Hz, 3 phase	380–690 V, 50/60 Hz, 3 phase
Type of mast	Square guide rail with integrated rack	Square guide rail with integrated rack
No. of masts	4	4
Length mast section	1.508 m	1.508 m
Regulations	EN 12158	EN 12158
Protection class	None (Safe area)	ATEX, Zone 2 Gas group IIB Temp. class T3

* Other lifting heights and platform sizes on request.

For other demands or specifications, please consult your Alimak representative.

www.alimak.com

ALIMAK

Pictures are illustrative only and do not necessarily show the configuration of products on the market at a given point in time. Products must be used in conformity with safe practice and applicable statutes, regulations, codes and ordinances. Specifications of products and equipment shown herein are subject to change without notice. Copyright © 2019 Alimak Group. All rights reserved.
Alimak is a registered trademark of Alimak Group.

1532 EN/May 2019